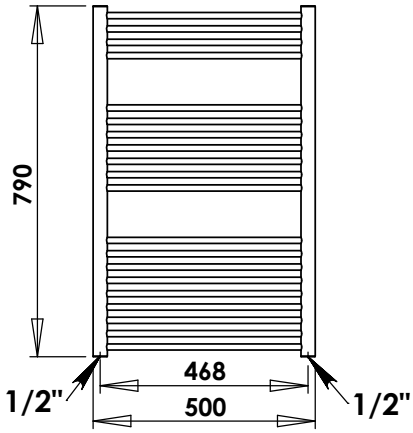
790
468
500
1/2"
1/2"

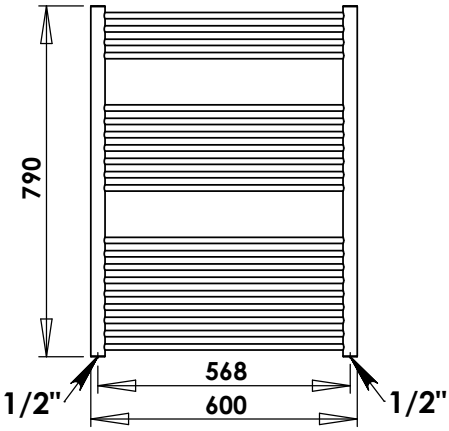
790
568
600
1/2"
1/2"

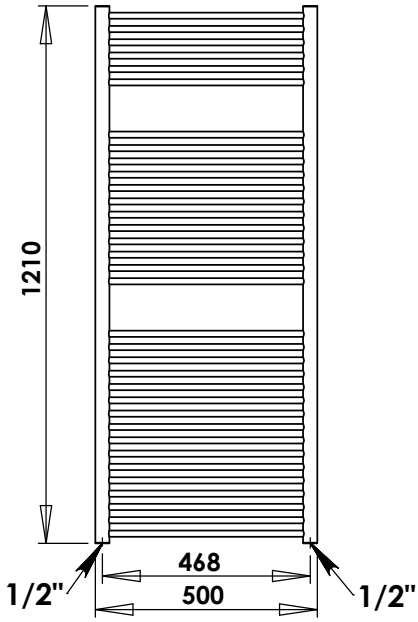
1210
468
500
1/2"
1/2"

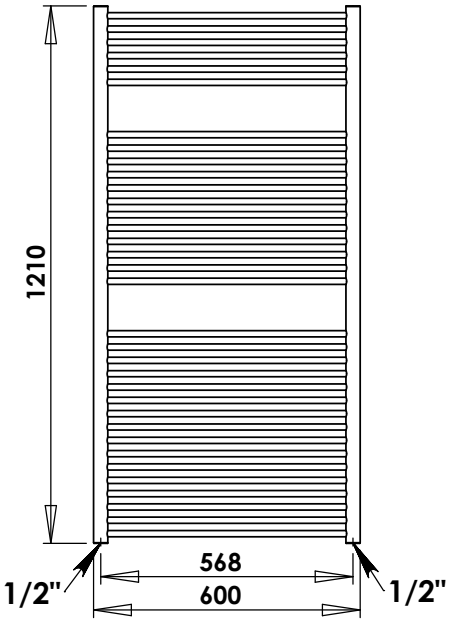
1210
568
600
1/2"
1/2"

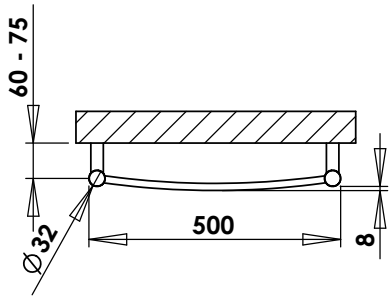
60 - 75
500
8
Ø32

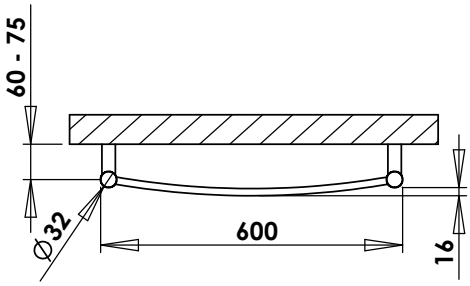
60 - 75
600
16
Ø32

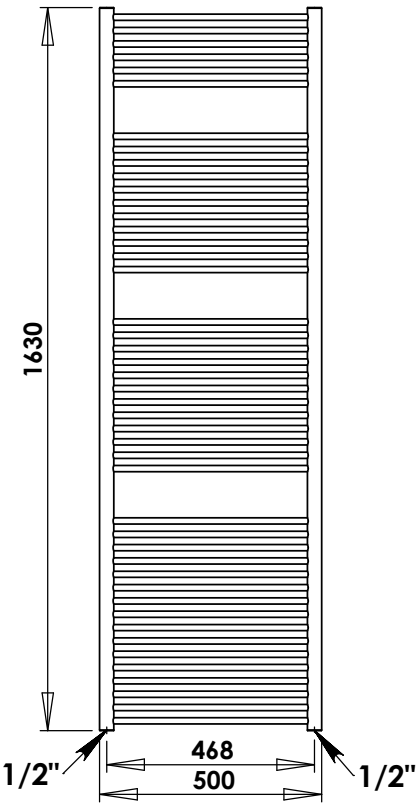
1630
468
500
1/2"
1/2"

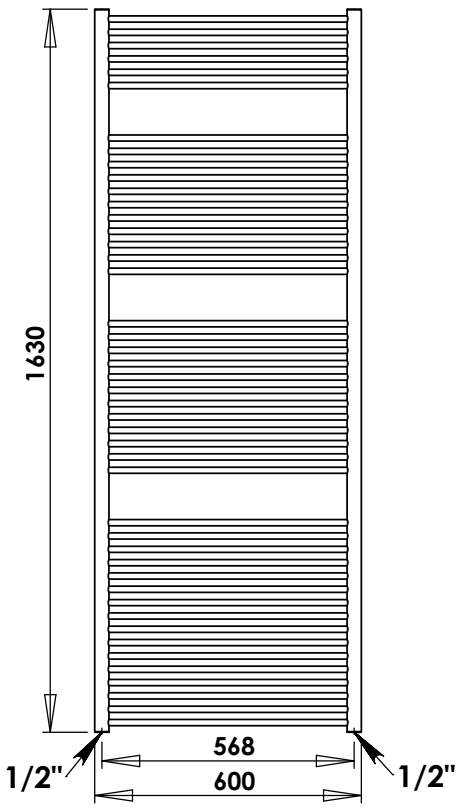
1630
568
600
1/2"
1/2"